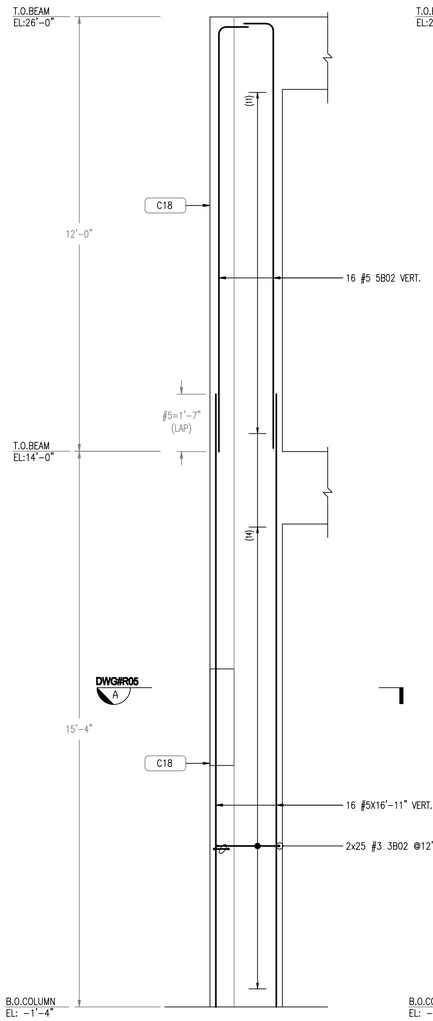

COLUMN - C1
SCALE = 1/2" = 1'-0"

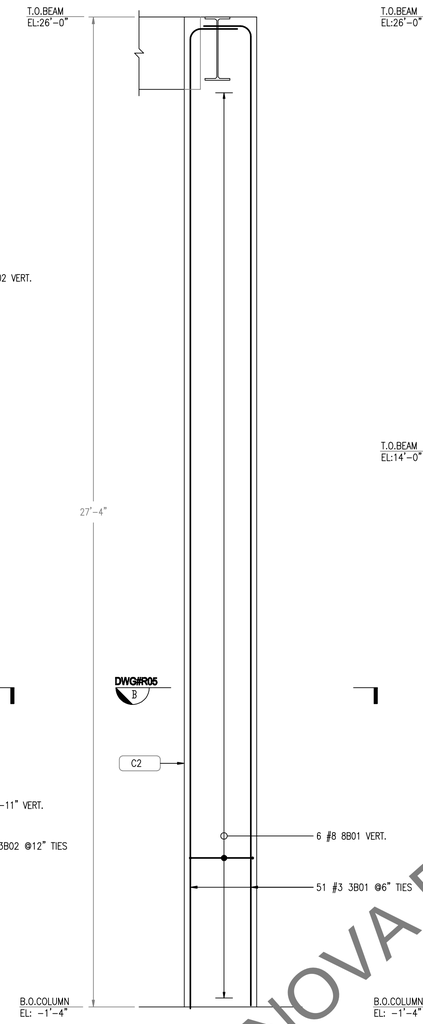

COLUMN - C2
SCALE = 1/2" = 1'-0"

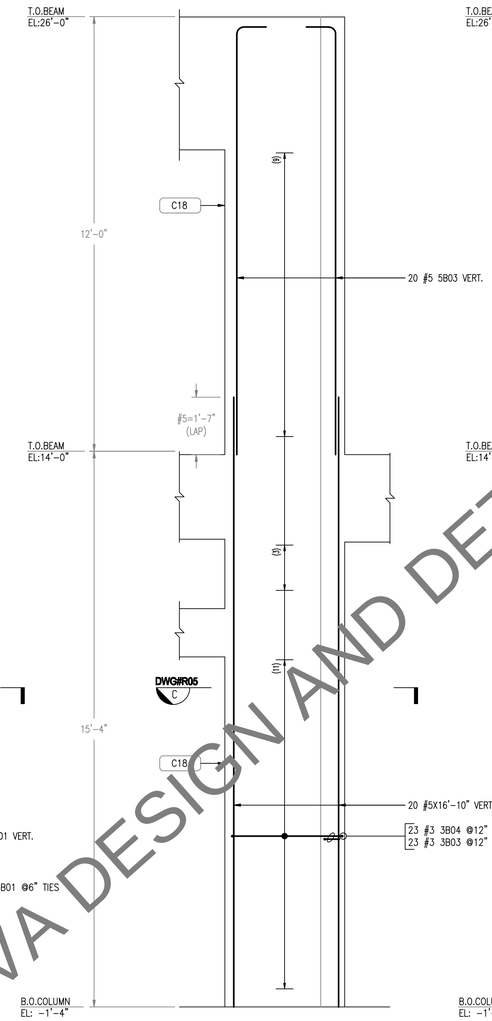

COLUMN - C3
SCALE = 1/2" = 1'-0"

A\E\C PLEASE VERIFY THE CLOUDED REINFORCEMENT DETAILED. (TYP.)

A/E/C PLEASE CHECK THE COLUMN MARK AS THE PLAN AND SECTION INDICATE DIFFERENT MARKS. (TYP.)

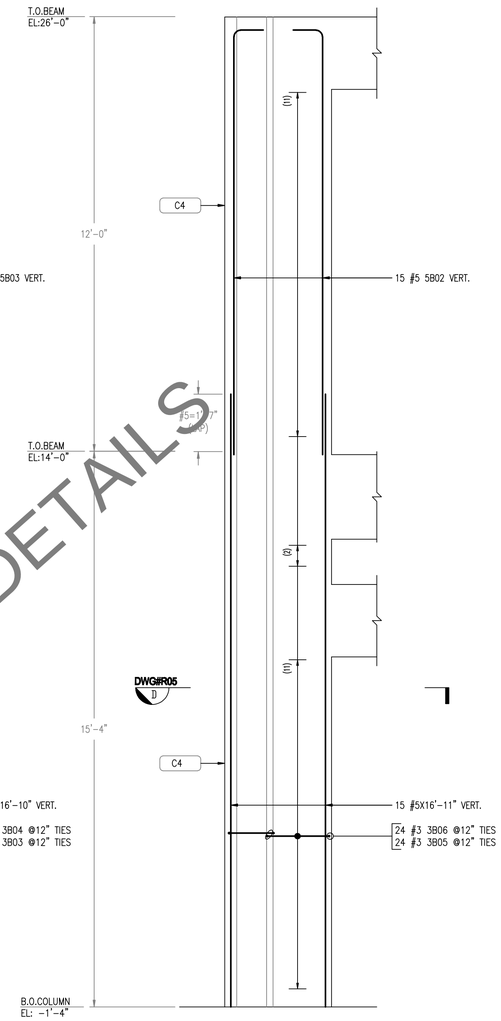

COLUMN - C4
SCALE = 1/2" = 1'-0"

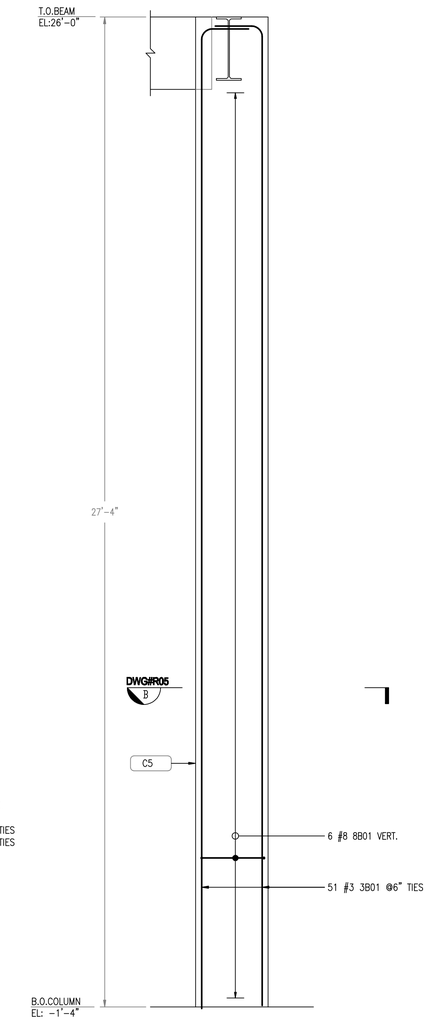

COLUMN - C5
SCALE = 1/2" = 1'-0"

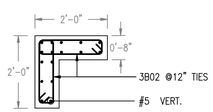

SECTION #A
SCALE = 1/2" = 1'-0"

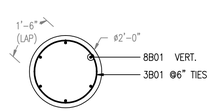

SECTION #B
SCALE = 1/2" = 1'-0"

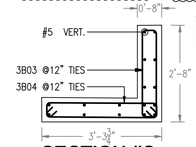

SECTION #C
SCALE = 1/2" = 1'-0"

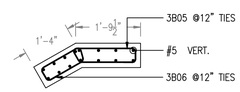

SECTION #D
SCALE = 1/2" = 1'-0"

Drawing Sheet : R05																		BAR LIST
Bar Mark	Qty	Size	Total Length	Type	'A'	'B'	'C'	'D'	'E'	'F'	'G'	'H'	'J'	'K'	'O'	'R'		
8B01	12	#8	28'-5"	2	1'-4"	27'-1"												
5B02	35	#5	12'-7"	2	0'-10"	11'-9"												
5B03	20	#5	12'-8"	2	0'-10"	11'-10"												
3B02	50	#3	5'-0"	T1	0'-4"	0'-5"	1'-9"	0'-5"	1'-9"		0'-4"							
3B03	23	#3	6'-4"	T1	0'-4"	0'-5"	2'-5"	0'-5"	2'-5"		0'-4"							
3B04	23	#3	7'-7 K"	T1	0'-4"	0'-5"	3'-0 K"	0'-5"	3'-0 K"		0'-4"							
3B06	24	#3	3'-10 K"	T7	0'-4"	0'-5"	1'-3"	0'-4 K"	1'-2"		0'-4"	0'-5"		0'-1"				
3B05	24	#3	4'-8 K"	T7	0'-4"	0'-4 K"	1'-8 K"	0'-4 K"	1'-6 K"		0'-4"	0'-4 K"		0'-2"				
3B01	102	#3	6'-11 K"	T3			5'-5 K"				1'-6"				1'-9"			

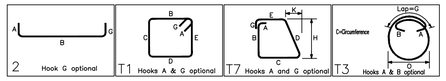

A/E/C PLEASE VERIFY COVER & LAP SCHEDULE

GENERAL NOTES:

COVER

COLUMN TOP – 2"

COLUMN SIDE – 1½"

LAP – 4000 PSI

LAP SCHEDULE FOR COLUMN	
SIZE	OTHERS
#3	12"
#4	15"
#5	19"
#6	23"
#7	26"
#8	30"

NOVA DESIGN AND DETAILS